SIGN-1-F

SIGN & POLE MOUNT | SIGNF Series | 2.25" dia.
4-8W (250-500lm) | 12V | HK LED

Project Name

Fixture Type

FEATURES

- 4W or 8W LED modular sign light.
- Wide flood distribution.
- CSA Listed for Wet Location, IP67 Standard.
- Utilize adjustable flood fixture head.
- Modular components - field changeable LED module.



Low Voltage LED Sign Flood Light: SIGN-1-F in Bronze

SPECIFICATIONS

Materials
Machine from solid billet 6061-T6 corrosion-resistant aluminum with 304 stainless steel hardware. Available in 304/316 stainless steel or 360 brass upon request.

Finish
Polyester powder coat on all aluminum materials with RoHS compliant procedures. Anodized finish is available. Stainless steel and brass models are provided with brushed surface.

Optional Barn Door
Optional barn doors for glare control and precision cut off. *(See page 4 for details)*

Voltage
12V AC. Requires remote step down transformer.

Wattage
4 or 8W HK LED.

Light Source
CRI 83. Available in CRI95 upon request. The chromaticity range is within a 3-step McAdam Ellipse. Standard CCT options are 2700K, 3000K, 4000K.

Dimming
MLV or ELV.

Lamp Base/Socket
Innovative cone-shaped lamp base and receptacle socket maximize the surface contact area to dissipate heat more effectively. *(See "Resources" for details)*

ORDERING GUIDE

EXAMPLE: **SIGN-1-F-12V-4-27-BK-12-BD-LVR-CM5**

MODEL	MATERIAL	VOLTAGE	WATTAGE	CCT	FINISH	EXTENSION
SIGN-1-F		**12V**				
SIGNF Series 2.25" Sign Light Integrated HK LED Low Voltage	**BLANK** Aluminum (Standard) **NBR** Natural Brass[1] **NSS** Natural Stainless Steel[1] **CU** Natural Copper[1]	**12V** 12V AC	**4** 4 Watts **8** 8 Watts	**27** 2700K **30** 3000K **40** 4000K	**BK** Black Powder Coat **BZ** Bronze Powder Coat **WT** White Powder Coat **ABK** Anodized Black[1] **ACL** Anodized Clear[1] **CC** Custom Powder Coat[1]	**LENGTH** **12** 12" **24** 24" **30** 30"

[1] Consult factory for specialty finish quoting and lead times

OPTIONAL INSTALLED ACCESSORIES

GLARE SHIELD

BD	Barn Door Glare Shields

MOUNTING

CANOPY MOUNT	
CM5	5" Round Canopy Plate
CM1	3.75" Square Canopy Plate
CM3	4.75" Square Canopy Plate
SURFACE MOUNT	
CB4.0	4" Round Surface Box
CB5.5	5.5" Round Surface Box

• Most common listed, see Page 4 for additional options

OUTDOOR MAGNETIC TRANSFORMERS (120V input/12VAC Output)

TRANSFORMERS (Go to Accessories for detailed specification)

EXAMPLE: **TXS-150-SS**

MODEL		WATTAGE (VA)	PRIMARY VOLTAGE (VAC)
TXM	Stainless steel, wet location outdoor magnetic transformer Multitap | 12-15VAC Output | MLV Dimming	**150** **300**	**OTR-SS** (120V Only)
TXS	Stainless steel, wet location outdoor magnetic transformer Multitap | 12VAC Output | MLV Dimming	**150** **300** **600**	**SS** (120V Only)
TXM	Compact, damp location magnetic transformer 12VAC Output | MLV Dimming	**20** **40** **60** **100**	**120**
IGT	In ground outdoor magnetic transformer 12VAC Output | MLV Dimming	**50** (120V Only) **100** **300** **600**	**120** **277**
TXE	In-fixture or near mounted electronic transformer 12VAC Output | ELV Dimming | Enclosure by others	**60**	**120** **277**

PRODUCT DRAWINGS

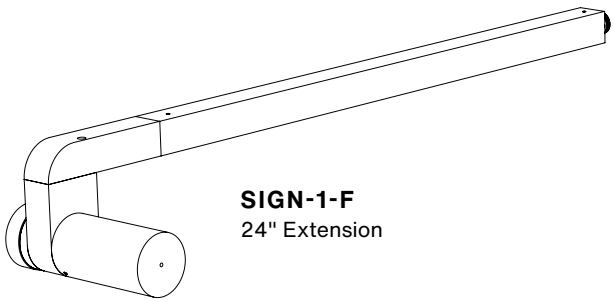

SIGN-1-F
24" Extension

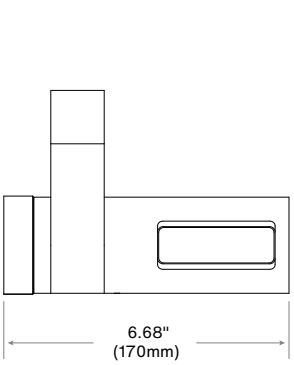

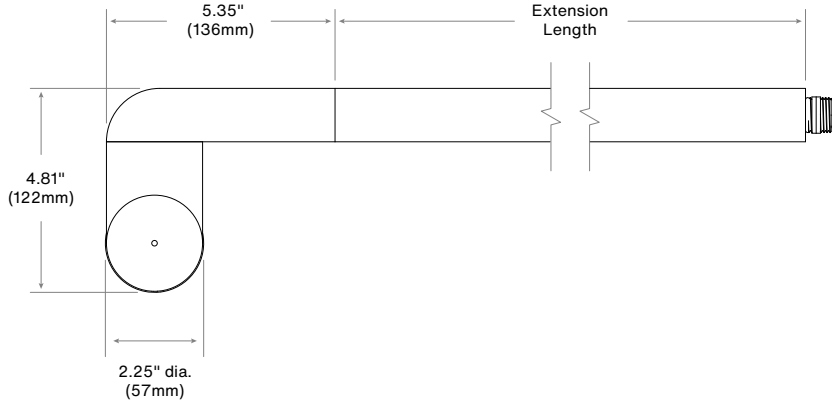

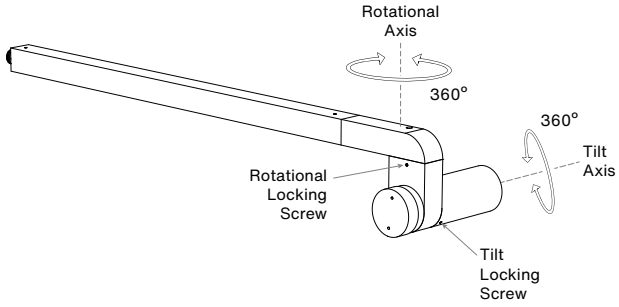

OPTIONS & ACCESSORIES

OPTIONAL GLARE SHIELD

Barn Door For ZFL16 Series-Single
Fastened With Set Screw

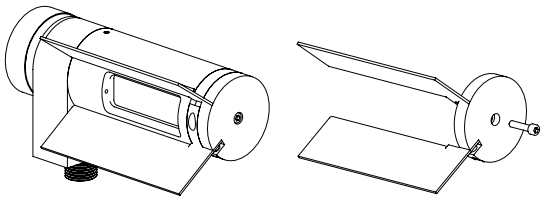

MOUNTING ACCESSORIES

Canopy Mount:

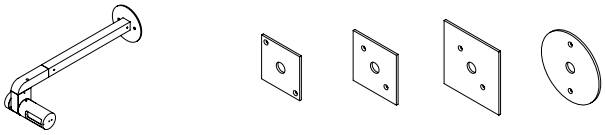

Fixture On CM5 | CM2 | CM1 | CM3 | CM5

Surface Mount Box:

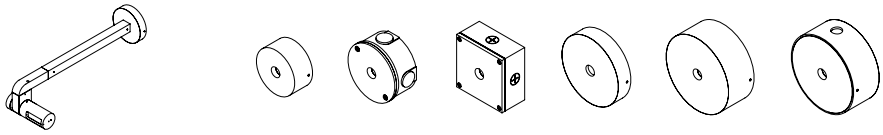

Fixture On CB5.1 | CB3.5 | CB4.0 | CB4.0-SQ | CB5.1 | CB5.5 | CB5.5-2K

Notes: